AIR INTAKE SYSTEM

SERVICE TOOLS

Description	Part Number	Page
OETIKER PLIERS	295 000 070	4–5

INTAKE MANIFOLD

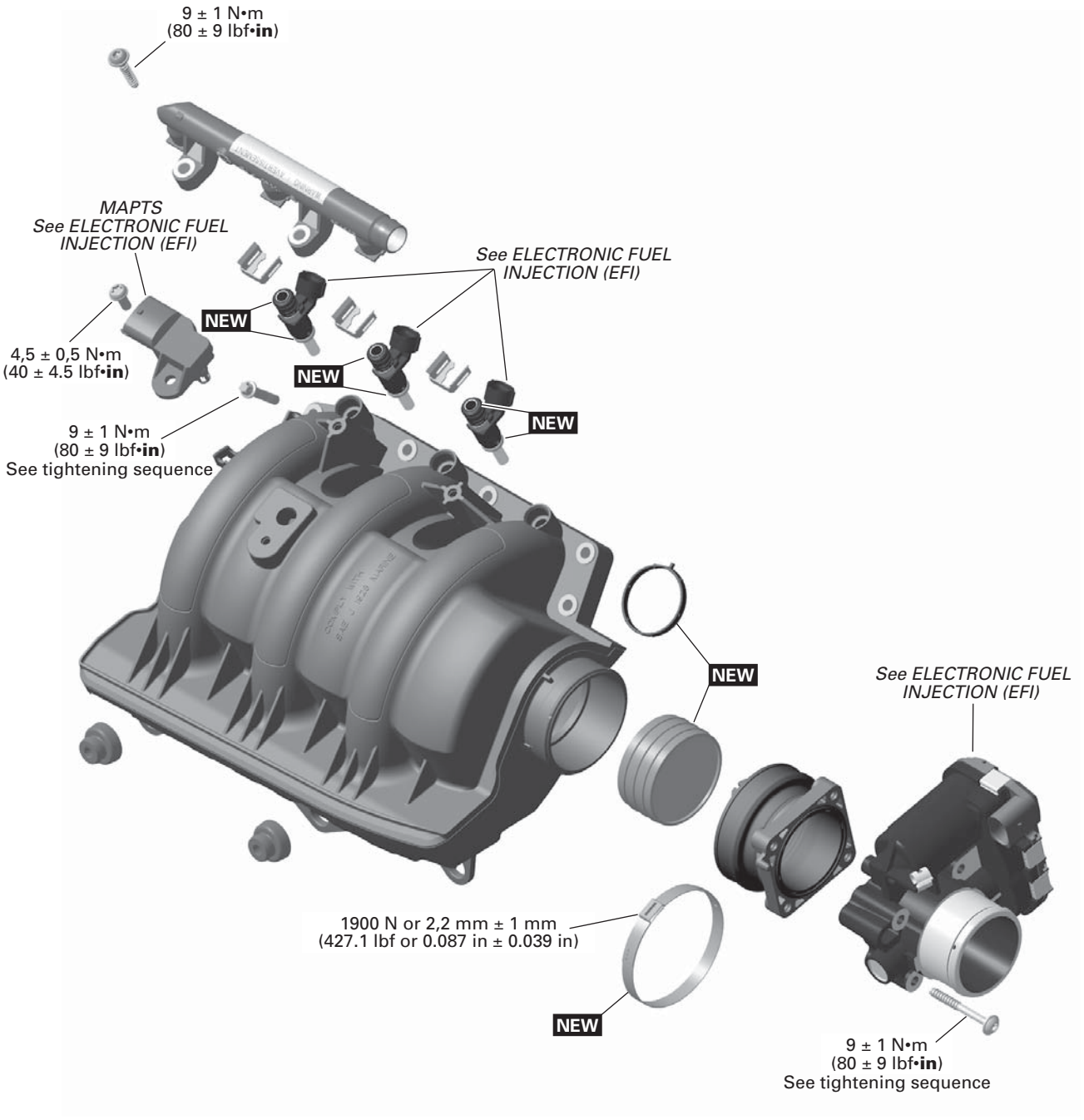

NEW = Component must be replaced when removed.

smr2014-013-001_a

AIR INTAKE SILENCER

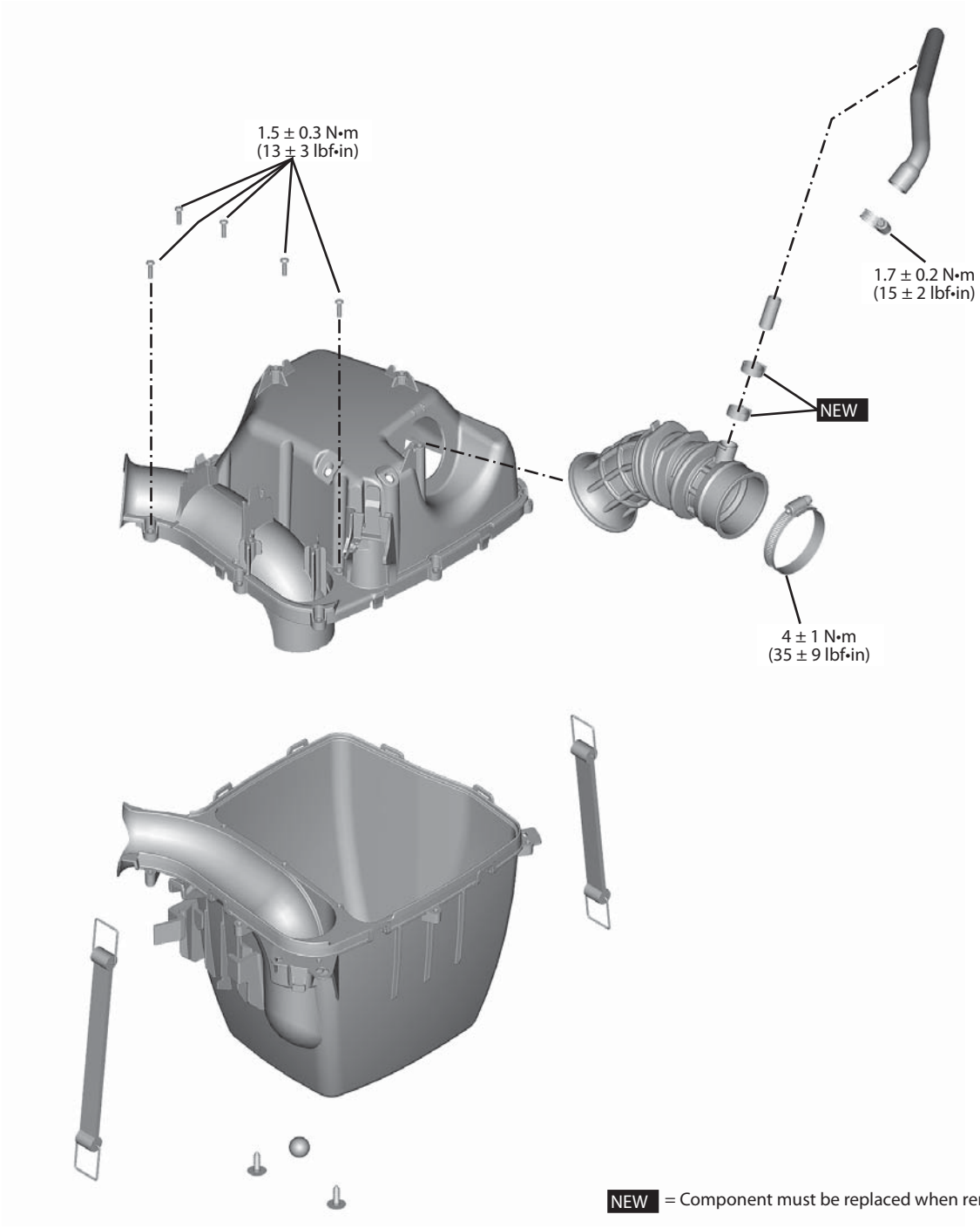

smr2014-013-500_a

PROCEDURES

FLAME ARRESTOR

Flame Arrestor Location

The flame arrestor is integrated in the intake manifold.

Flame Arrestor Access

Remove the central body. Refer to *BODY* subsection.

Remove Oetiker clamp and discard it.

REQUIRED TOOL	
OETIKER PLIERS (P/N 295 000 070)	

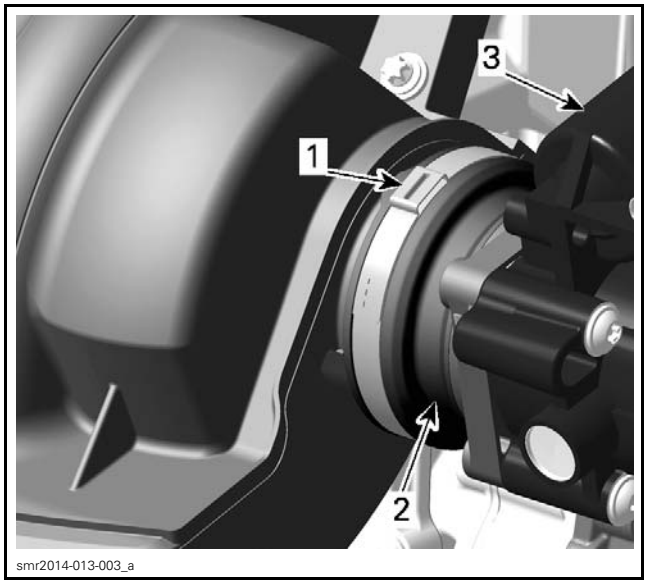

smr2014-013-003_a

1. *Oetiker clamp*
2. *Connecting socket*
3. *Throttle body*

Remove connecting socket from intake manifold.

Move connecting socket with throttle body aside.

Flame Arrestor Inspection

Check if flame arrestor is clogged.

NOTE: A clogged flame arrestor may have a negative impact on engine performance.

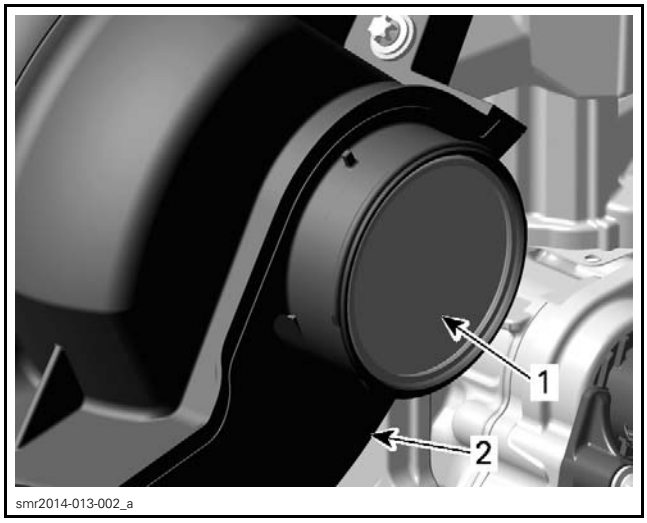

smr2014-013-002_a

1. *Flame arrestor*
2. *Intake manifold*

Flame Arrestor Removal

Carefully insert a small flat screwdriver between flame arrestor gasket and intake manifold.

Pry out flame arrestor from intake manifold in alternate diagonally order.

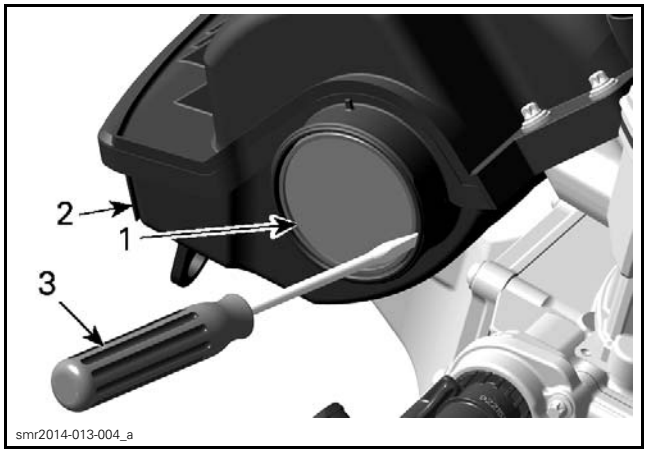

smr2014-013-004_a

1. *Flame arrestor*
2. *Intake manifold*
3. *Flat screwdriver*

Flame Arrestor Cleaning

Clean flame arrestor with solvent and compressed air.

⚠ CAUTION Always wear safety goggles when working with compressed air system.

Connecting Socket Inspection.

Check if connecting socket is cracked, brittle or otherwise damaged. Replace if necessary.

CONNECTING SOCKET

Flame Arrestor Installation

The installation is the reverse of the removal procedure. However, pay attention to the following.

Always install a **NEW** gasket on the flame arrestor.

Make sure to index connecting socket notch with intake manifold tab.

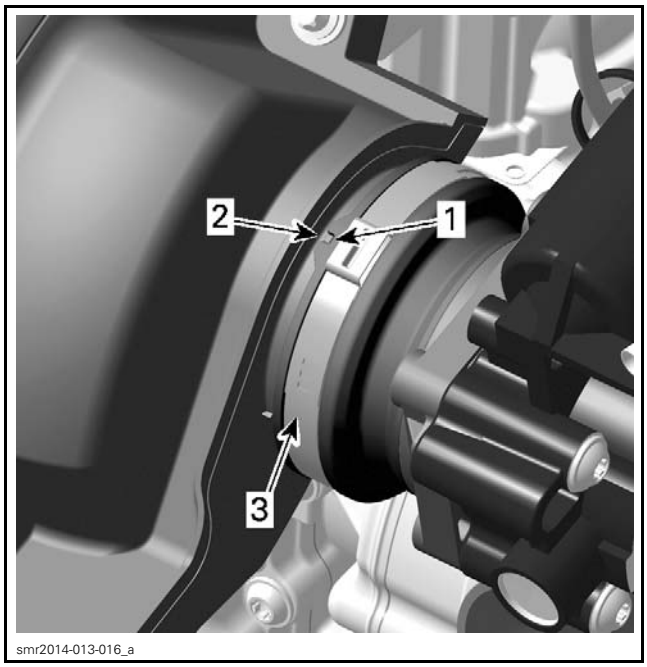

1. *Connecting socket notch*
2. *Intake manifold tab*
3. *Oetiker clamp*

Crimp Oetiker clamp beside the intake manifold tab.

REQUIRED TOOL	
OETIKER PLIERS (P/N 295 000 070)	

OETIKER CLAMP CRIMPING
2.2 mm ± 1 mm (.087 in ± .039 in) or 1 900 N (427.1 lbf)

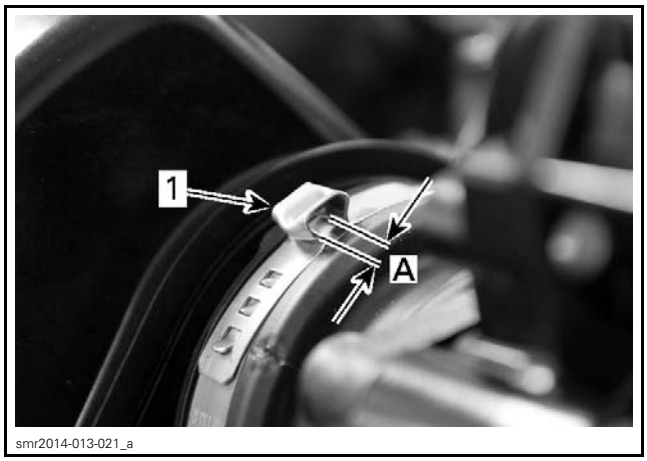

1. *Oetiker clamp*

A. *Crimp to 2.2 mm ± 1 mm (.087 in ± .039 in)*

INTAKE MANIFOLD

Intake Manifold Access

Remove the central body. Refer to *BODY* subsection.

Intake Manifold Removal

1. Disconnect manifold absolute pressure and temperature sensor (MAPTS).

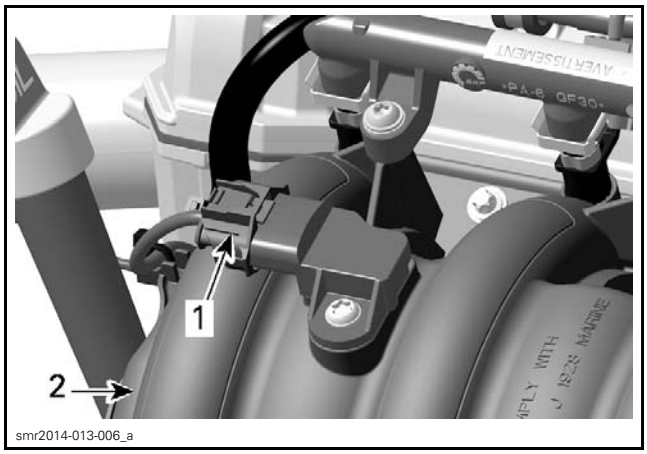

1. *MAPTS connector*
2. *Intake manifold*

2. Cut locking ties securing MAPTS harness to intake manifold.

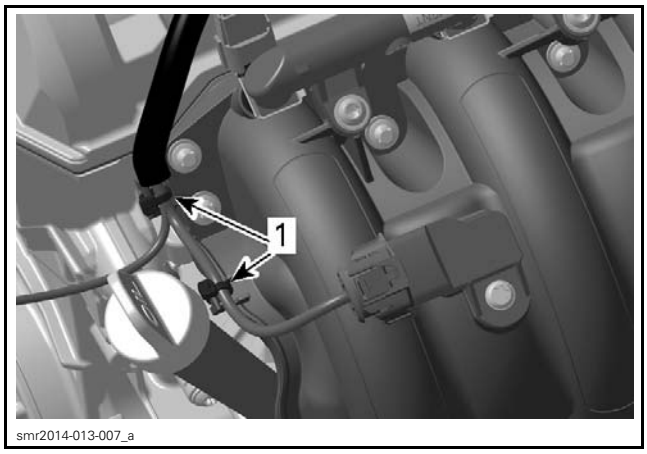

1. *Locking ties*

3. Remove screws retaining the throttle body to connecting socket.

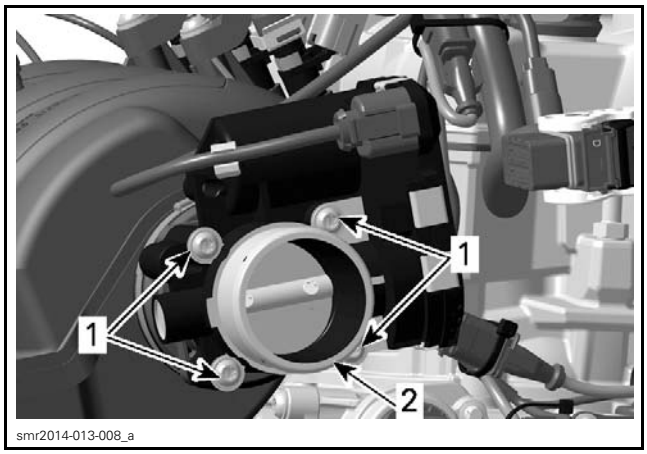

1. *Retaining screws*
2. *Throttle body*

4. Move throttle body aside.
5. Disconnect fuel injector connectors.

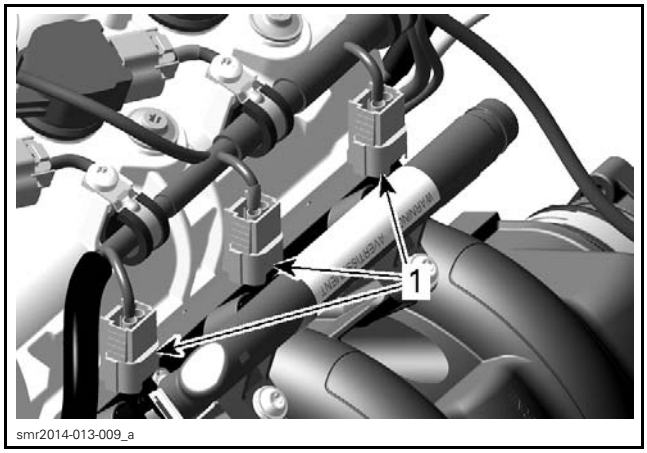

1. *Fuel injector connectors*

6. Remove screws securing intake manifold to cylinder head.

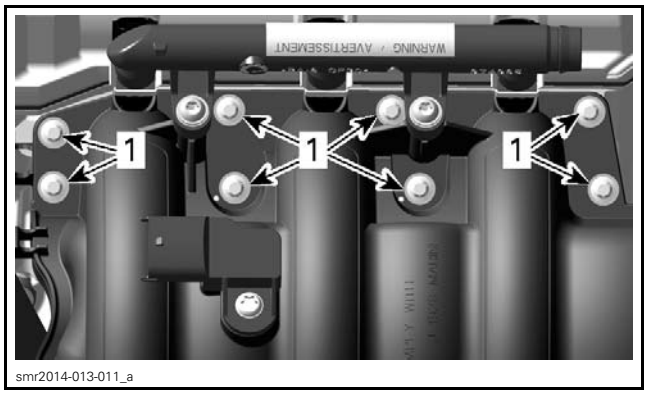

1. *Intake manifold screws*

7. Remove intake manifold from engine.
8. Remove and discard intake manifold gaskets.
9. If required, remove the following parts from intake manifold:
   - Connecting socket. Refer to *FLAME ARRESTOR* in this subsection.
   - Flame arrestor. Refer to *FLAME ARRESTOR* in this subsection.
   - MAPTS. Refer to *ELECTRONIC FUEL INJECTION (EFI)* subsection.
   - Fuel rail with injectors. Refer to *ELECTRONIC FUEL INJECTION (EFI)* subsection.

Intake Manifold Inspection

Check intake manifold for cracks, warping at flanges or any other visible damages. Replace if required.

Check if intake manifold gaskets are brittle, hard or otherwise damaged. Replace if necessary.

Drain intake manifold if any liquids accumulated.

Flush intake manifold with solvent and let it dry out.

Intake Manifold Installation

The installation is the reverse of the removal procedure. However, pay attention to the following.

Install **NEW** gaskets with tab properly inserted into notch.

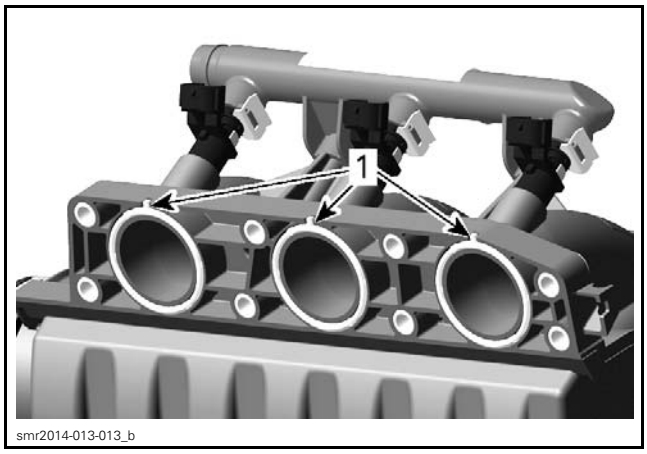

1. Gaskets tab properly inserted

Ensure that rubber grommets are properly inserted.

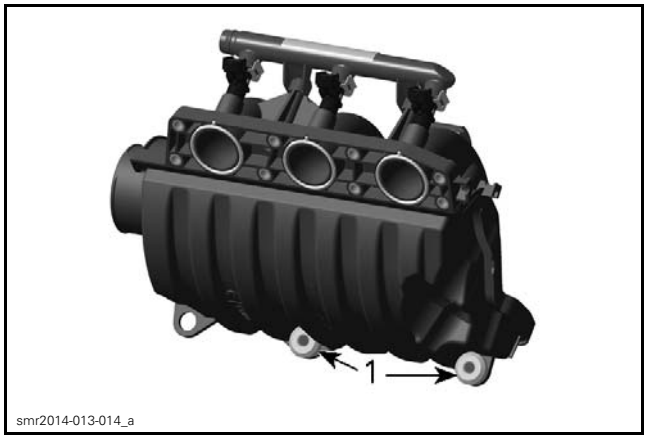

1. Rubber grommets

Tighten intake manifold screws to specification as per the following sequence.

INTAKE MANIFOLD SCREWS	
Tightening Torque	9 N•m ± 1 N•m (80 lbf•**in** ± 9 lbf•**in**)

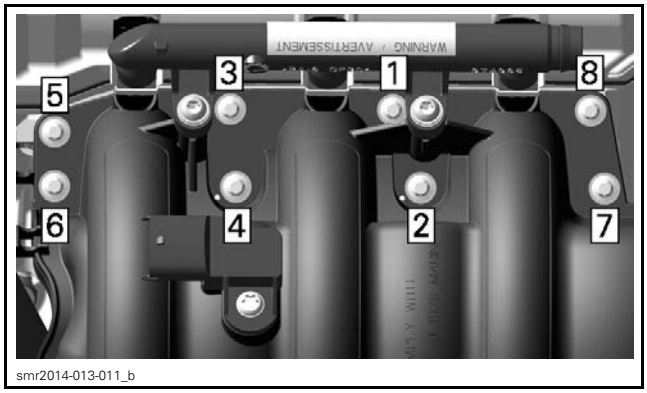

TIGHTENING SEQUENCE

Refer to *FLAME ARRESTOR* in this subsection to install:

– Flame arrestor
– Connecting socket.

Refer to *ELECTRONIC FUEL INJECTION (EFI)* subsection to install:

– MAPTS
– Throttle body
– Fuel rail with injectors.

AIR INTAKE SILENCER

Air Intake Silencer Access

Remove the central body. Refer to *BODY* subsection.

Air Intake Silencer Removal

Cut locking ties securing electrical harnesses to air intake silencer.

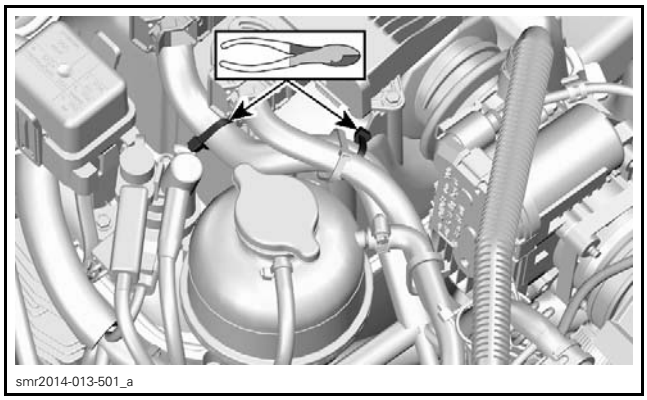

Remove the ECM.

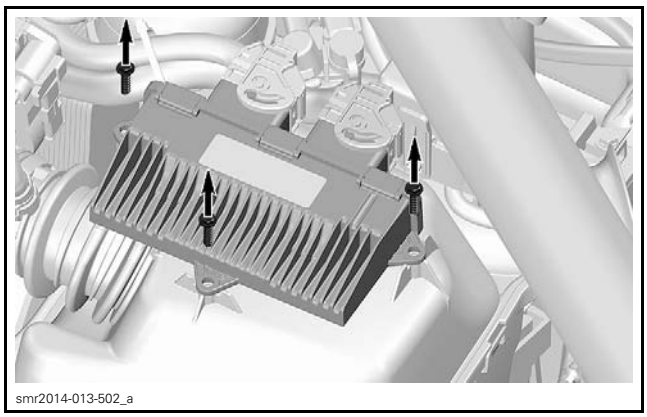

Loosen throttle body clamp.

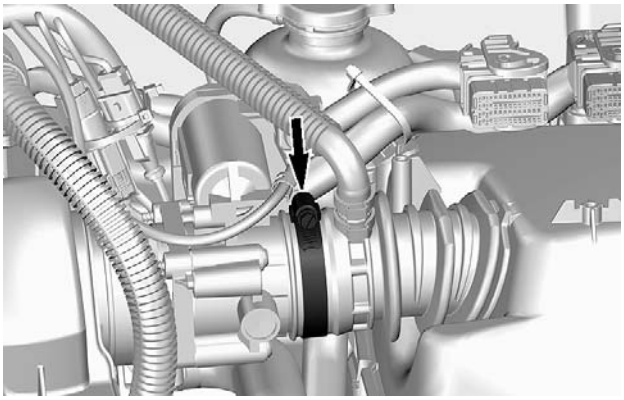
smr2014-013-503_a

Detach the RH retaining strap.

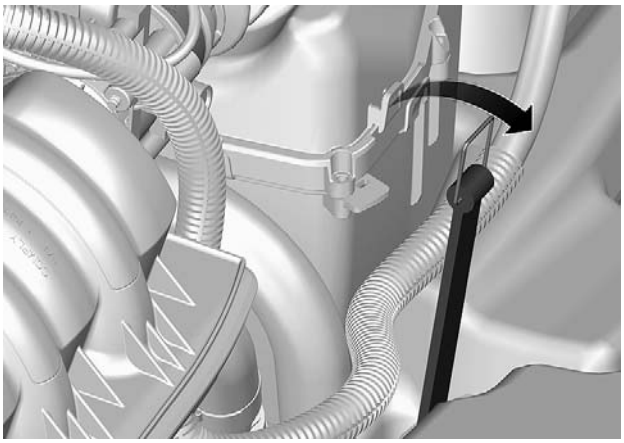
smr2014-013-504

Remove fuse box and starter solenoid.

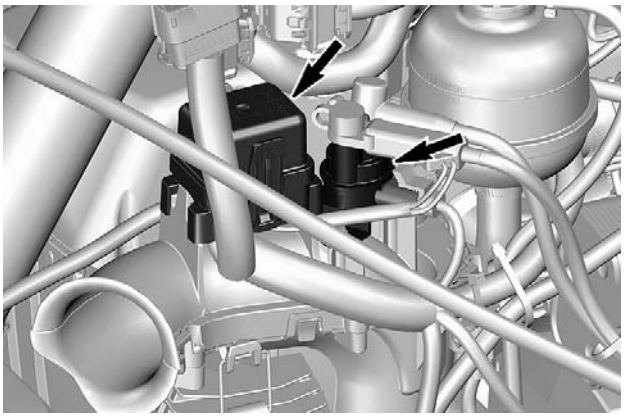
smr2014-013-505_a

Loosen coolant reservoir screw and move the reservoir aside.

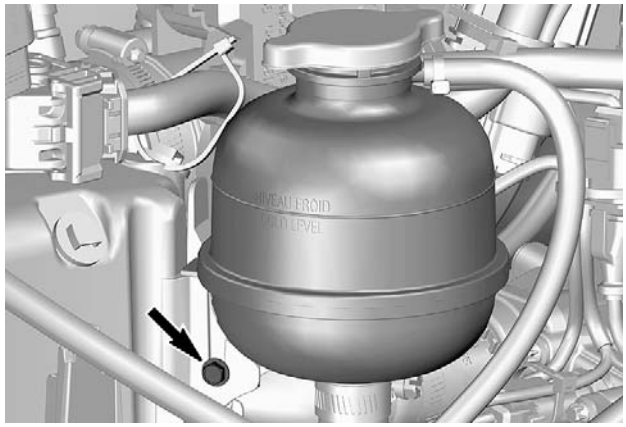
smr2014-013-506_a

Remove the last retaining strap.

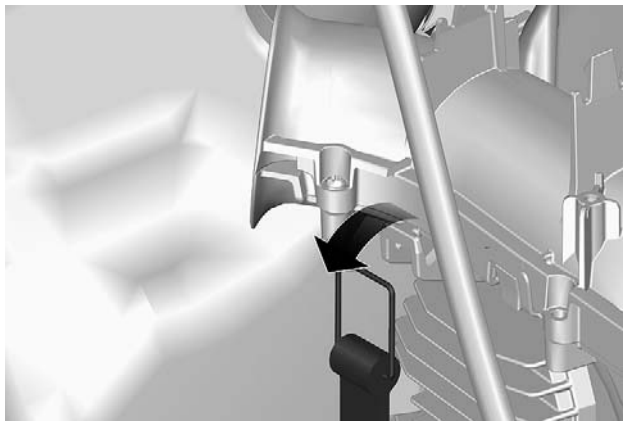
smr2014-013-507

Remove the voltage regulator/rectifier.

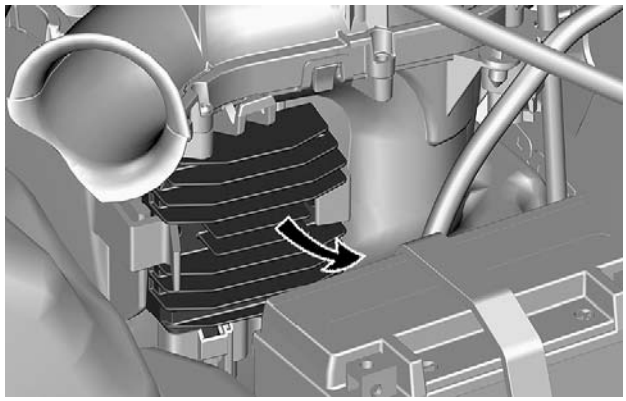
smr2014-013-509_a

Loosen clamp and remove vent hose from the cylinder head cover.

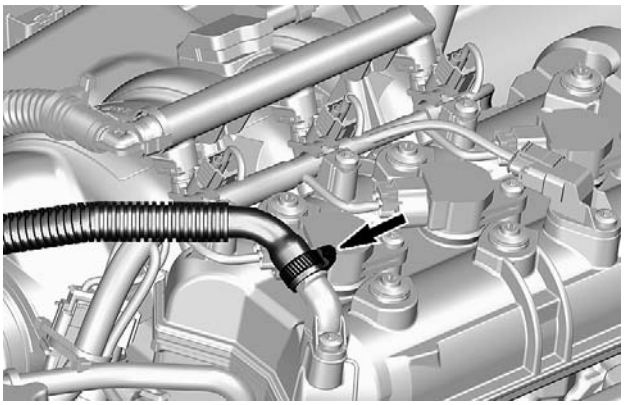
smr2014-013-508_a

Detach the diagnostic connector and pull the air intake silencer out of the vehicle.

Air Intake Silencer Disassembly

Remove screws securing upper section of air intake silencer to the lower section.

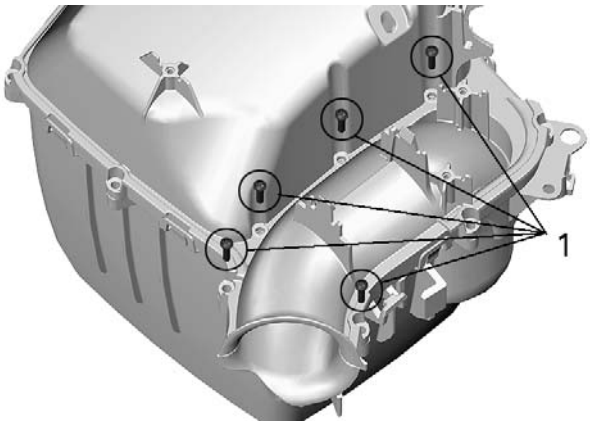

smr2014-013-511_a

Release all retaining tabs.

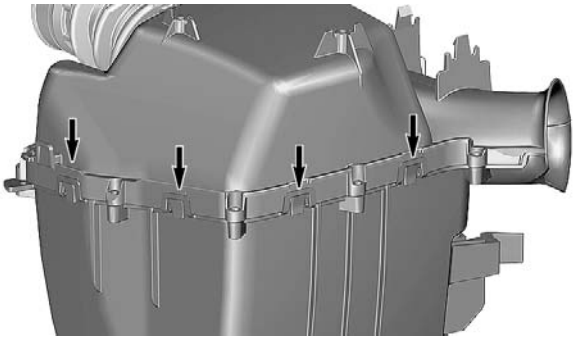
smr2014-013-512_a

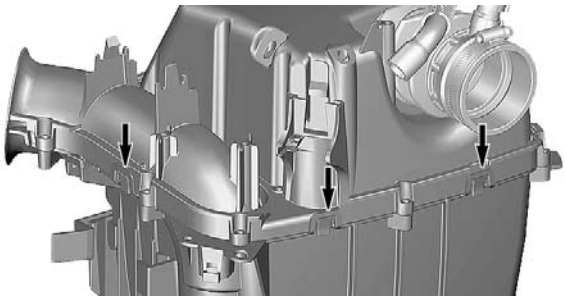
smr2014-013-513_a

Separate upper and lower sections.

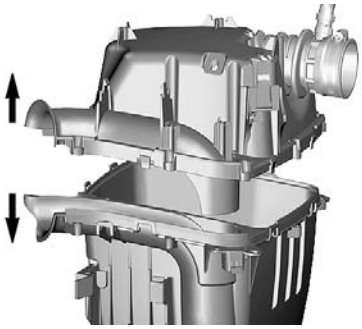
smr2014-013-514_a

Air Intake Silencer Assembly

Align the rubber tab in the notch.

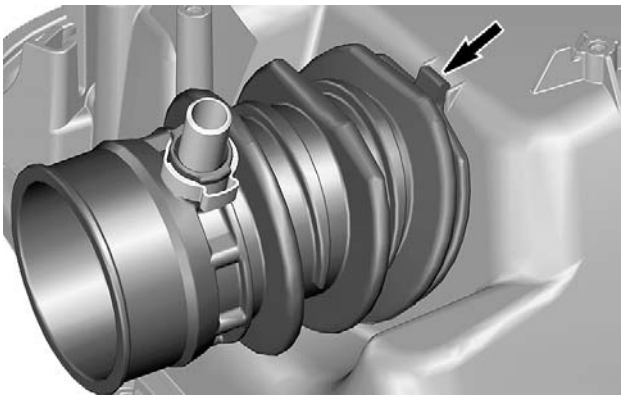
smr2014-013-515_a

Make sure that air intake tube is well locked (groove) in the upper section of the air intake silencer.

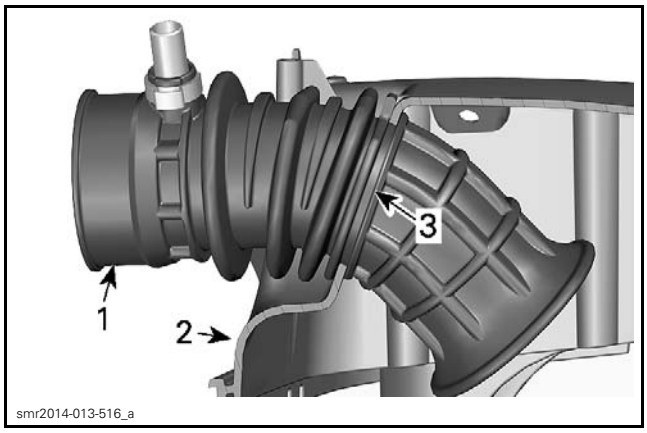

1. *Air intake tube*
2. *Air intake silencer upper section*
3. *Retaining groove*

Secure the upper section to lower section using previously removed K40 x 16 Torx screws.

TIGHTENING TORQUE	
K40 x 16 Torx screws	1.5 N•m ± 0.3 N•m (13 lbf•**in** ± 3 lbf•**in**)

In case of a broken clip, install a K40 x 16 Torx screw (P/N 250 000 287) on each side of the defective clip.

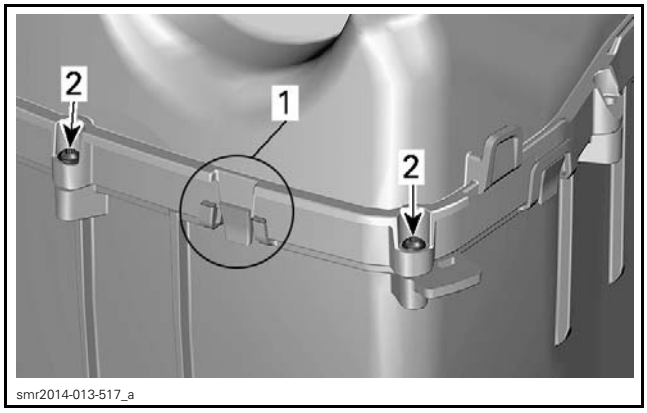

1. *Broken clip*
2. *K40 x 16 Torx screws (P/N 250 000 287)*

TIGHTENING TORQUE	
K40 x 16 Torx screws	1.5 N•m ± 0.3 N•m (13 lbf•**in** ± 3 lbf•**in**)

Air Intake Silencer Installation

The installation is the reverse of the removal procedure.